Technical Data Sheet

Compressor model **GP16TG**

Voltage **200-220/230V 50/60Hz ~1**

Refrigerant **R134a**

APPLICATION

Application	High Back Pressure
Refrigerant	R134a
Evaporating Temp.	-15,0 ºC to 10,0 ºC
Expansion	Capillar/Valve
Comp. Cooling	Fan cooled
Max. ambient temp.	43,0 ºC
Compatible refriger.	R1234yf

COMPRESSOR

Displacement	16,15 cm³
Diameter	31,19 mm
Stroke	21,13 mm
Net Weight	11,93 Kg
Oil type	ISO VG 32 ESTER
Oil charge	400 cm³

MOTOR

Nominal Power	3/8 hp
Voltage/Frequency	230V 60Hz
Voltage range	196-253 V
Type	CSIR
Phase number	1 PH
Locked Rotor Amps (LRA)	25,00 A
Max. Cont. Current (MCC)	6,50 A
Main W. resist. at 25ºC	3,80 Ω
Start W. resist. at 25ºC	13,10 Ω

NOMINAL PERFORMANCE

	ASHRAE	CECOMAF
Cooling Capacity	1.450 kCal/h	1.408 W
COP	2,00 W/W	1,74 W/W
EER	1,72 kCal/Wh	1,50 kCal/Wh
Input Power	845 W	811 W
Current	4,50 A	4,36 A

APPROVALS

TEST CYCLE CONDITIONS

	ASHRAE	**CECOMAF**
	HBP (D)	**HBP (C)**
Evaporating temp. (T_e)	7,2 ºC	5,0 ºC
Condensing temp. (T_c)	55,0 ºC	55,0 ºC
Liquid temp. ($T_{liq.}$)	46,0 ºC	55,0 ºC
Ambient temp. ($T_{amb.}$)	35,0 ºC	32,0 ºC
Suction temp. ($T_{suction}$)	35,0 ºC	32,0 ºC
Voltage/Frequency	230 V 60 Hz	230 V 60 Hz

ELECTRICAL COMPONENTS

Starting capacitor	72- 88 µF 330 V			
Relay	Option 1	Option 2		
Reference	2014 166.	QLZ-11.0A		
Pick-Up	11,00 A	11 A		
Drop-Out	9,35 A	9.35 A		
Protector	Option 1	Option 2		
Reference	MRA38134	T0348		
Current	15,80 A	15,40 A		
Time check	7,5-14 seg	7,5-14 seg		
Disc temp. (Open/Close)	105,00 / 52,00 ºC	105,00 / 52,00 ºC		

Technical Data Sheet

cubigel compressors

ASHRAE

Tc °C	Te °C	Cooling Capacity kCal/h	Consumption W	Current A	COP W/W	EER kCal/Wh
40	-15	655	460	3,07	1,66	1,42
40	-10	866	516	3,25	1,95	1,68
40	-5	1.107	577	3,47	2,23	1,92
40	0	1.376	645	3,72	2,48	2,13
40	5	1.674	719	3,99	2,71	2,33
40	7,2	1.814	753	4,13	2,80	2,41
40	10	2.001	798	4,31	2,91	2,51
45	-15	612	473	3,11	1,50	1,29
45	-10	806	533	3,31	1,76	1,51
45	-5	1.028	598	3,54	2,00	1,72
45	0	1.280	670	3,81	2,22	1,91
45	5	1.560	748	4,11	2,43	2,09
45	7,2	1.693	784	4,25	2,51	2,16
45	10	1.869	831	4,44	2,62	2,25
50	-15	569	487	3,15	1,36	1,17
50	-10	745	550	3,37	1,58	1,35
50	-5	950	619	3,62	1,78	1,53
50	0	1.184	695	3,90	1,98	1,70
50	5	1.447	777	4,22	2,17	1,86
50	7,2	1.571	814	4,37	2,24	1,93
50	10	1.738	864	4,58	2,34	2,01
55	-15	526	500	3,20	1,22	1,05
55	-10	684	567	3,43	1,40	1,21
55	-5	872	641	3,70	1,58	1,36
55	0	1.088	720	4,00	1,76	1,51
55	5	1.333	805	4,34	1,92	1,65
55	7,2	1.450	845	4,50	2,00	1,72
55	10	1.607	897	4,72	2,08	1,79
60	-15	483	513	3,25	1,09	0,94
60	-10	624	585	3,50	1,24	1,07
60	-5	794	662	3,78	1,39	1,20
60	0	992	745	4,10	1,55	1,33
60	5	1.219	834	4,46	1,70	1,46
60	7,2	1.329	876	4,63	1,76	1,52
60	10	1.476	930	4,86	1,85	1,59
65	-15	440	527	3,29	0,97	0,84
65	-10	563	602	3,56	1,09	0,94
65	-5	715	683	3,86	1,22	1,05
65	0	896	770	4,20	1,35	1,16
65	5	1.106	863	4,58	1,49	1,28
65	7,2	1.207	906	4,76	1,55	1,33
65	10	1.345	963	5,00	1,62	1,40

CECOMAF

Tc °C	Te °C	Cooling Capacity W	Consumption W	Current A	COP W/W	EER kCal/Wh
40	-15	705	463	3,07	1,53	1,32
40	-10	934	518	3,26	1,80	1,56
40	-5	1.193	580	3,48	2,06	1,78
40	0	1.482	649	3,73	2,29	1,97
40	5	1.802	723	4,01	2,49	2,15
40	7,2	1.952	758	4,15	2,58	2,23
40	10	2.152	804	4,33	2,68	2,31
45	-15	656	476	3,12	1,38	1,19
45	-10	864	536	3,32	1,61	1,39
45	-5	1.103	602	3,56	1,83	1,58
45	0	1.372	674	3,82	2,04	1,76
45	5	1.671	752	4,13	2,22	1,92
45	7,2	1.812	789	4,27	2,30	1,98
45	10	2.000	837	4,47	2,39	2,07
50	-15	606	489	3,16	1,24	1,07
50	-10	794	553	3,38	1,44	1,24
50	-5	1.012	623	3,63	1,62	1,40
50	0	1.261	699	3,92	1,80	1,56
50	5	1.539	781	4,24	1,97	1,70
50	7,2	1.672	820	4,40	2,04	1,76
50	10	1.848	870	4,60	2,12	1,84
55	-15	556	503	3,21	1,11	0,96
55	-10	724	570	3,45	1,27	1,10
55	-5	922	644	3,71	1,43	1,24
55	0	1.150	724	4,02	1,59	1,37
55	5	1.408	811	4,36	1,74	1,50
55	7,2	1.531	850	4,52	1,80	1,56
55	10	1.697	903	4,74	1,88	1,62
60	-15	507	516	3,26	0,98	0,85
60	-10	654	588	3,51	1,11	0,96
60	-5	831	666	3,79	1,25	1,08
60	0	1.039	750	4,12	1,39	1,20
60	5	1.277	840	4,48	1,52	1,31
60	7,2	1.391	881	4,65	1,58	1,36
60	10	1.545	936	4,88	1,65	1,43
65	-15	457	530	3,30	0,86	0,75
65	-10	584	605	3,57	0,96	0,83
65	-5	741	687	3,87	1,08	0,93
65	0	928	775	4,21	1,20	1,04
65	5	1.146	869	4,60	1,32	1,14
65	7,2	1.251	912	4,78	1,37	1,18
65	10	1.393	969	5,03	1,44	1,24

EN12900

X	Cooling Capacity (W)	Consumption (W)	Current (A)	Mass Flow (kg/h)
1	2.372,2855163540	458,3898419553	2,9588735709	41,092559605437
2	93,8557139155	8,3266555846	0,0267844354	1,7445784812223
3	-22,7418044461	5,1777480791	0,0205691610	-0,21102067176604
4	0,5982026735	0,1336543940	0,0008024718	0,018301187745323
5	-0,8408600992	0,1622588044	0,0007508688	-0,007929351184547

Equation	$x_1 + x_2Te + x_3Tc + x_4Te^2 + x_5TeTc$

COMPRESSOR DIMENSIONS

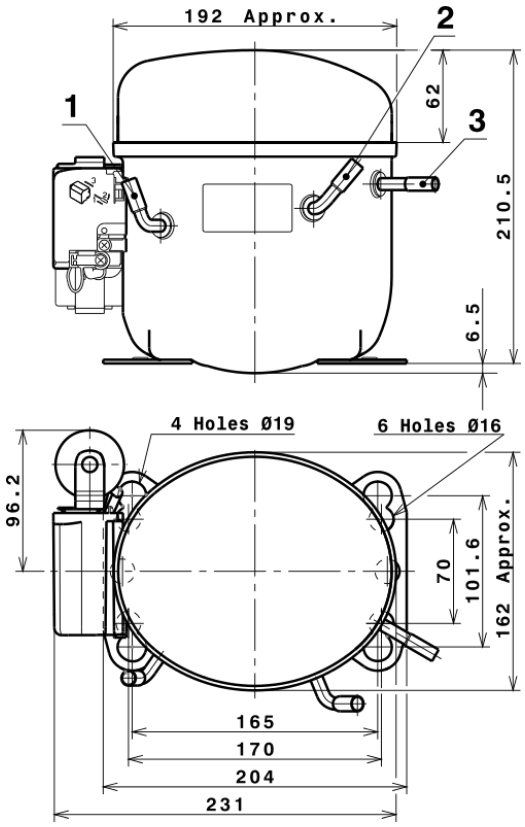

	DESIGNATION	INTERNAL DIAM.
1	Suction	8,1 mm
2	Service	8,1 mm
3	Discharge	6,5 mm

WIRING DIAGRAMS AND ELECTRICAL ASSEMBLY

CSIR CONNECTION (L, P ranges)

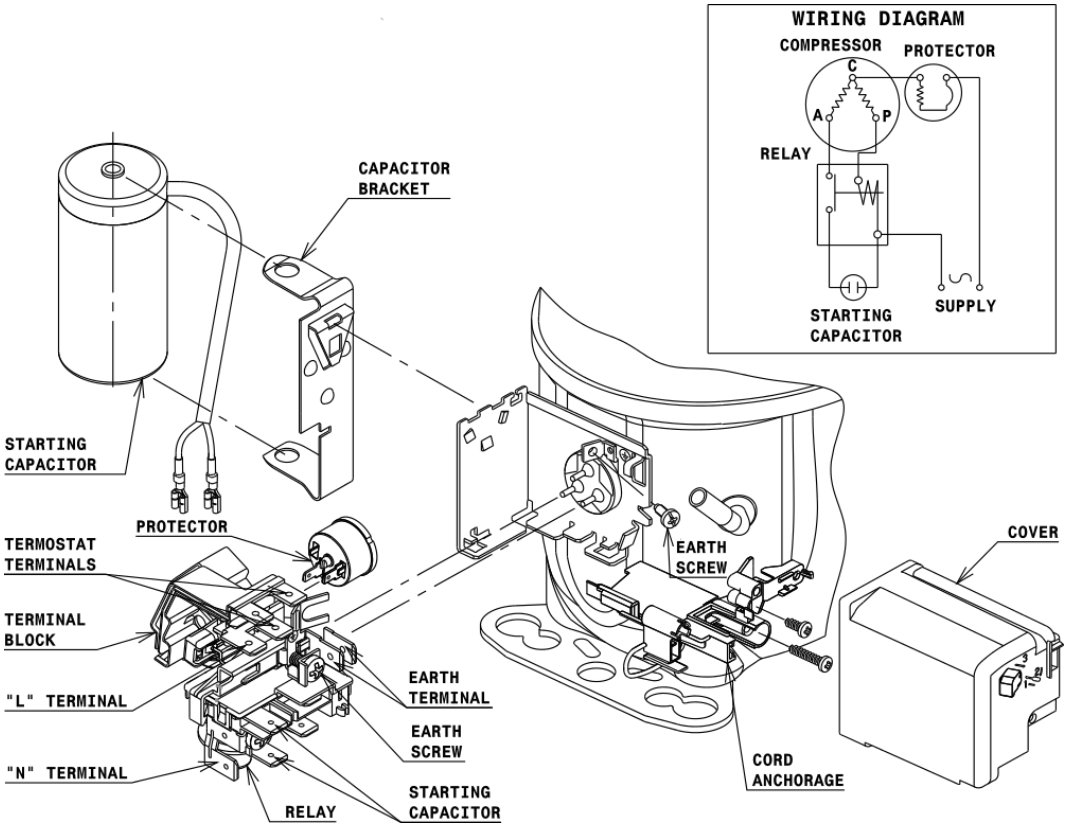

FIXINGS

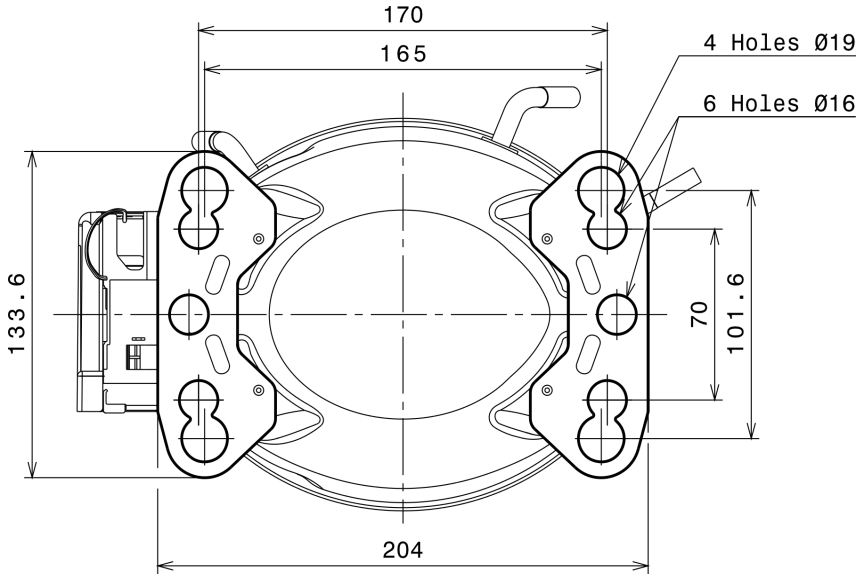

SILENT BLOCKS (MOUNTING ACCESSORIES)

STANDARD

Ø16 holes (170x70 net)

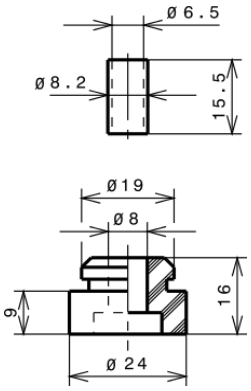

AMERICAN FEET

Ø19 holes (165x101.6 net)

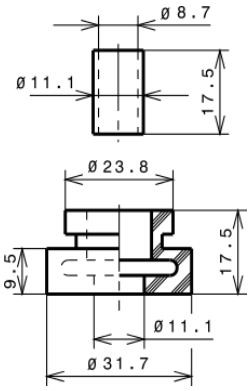

SNAP-ON

Ø16 holes (170x70 net)

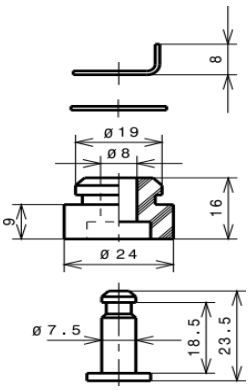

SOA

SOA R134a HBP